STP2CMP

Low voltage 2-channel constant current LED driver with charge pump

Datasheet - production data

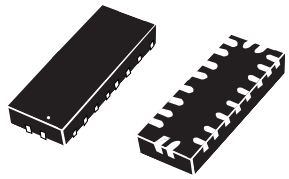

QFN20 (1.8x3.2 mm)

Features

- Operating voltage range: V_{CC} 2.7 V to 5.5 V
- 2-channel LED driver with individual ON/OFF control directly from input pins
- Individually programmable output current for the 2 channels through 2 external resistors with a max. capability of 30 mA
- Absolute output current accuracy of max. ±7% and channel-to-channel mismatch of max. ±4%
- Selectable charge pump enable/disable
- Thermal protection
- Small QFN20 (1.8x3.2 mm) package

Applications

- Mobile phone display backlighting

Description

The STP2CMP is a charge-pump-based 2-channel LED driver designed for RGB illumination or LCD display backlighting. The STP2CMP works off a battery with an input voltage between 2.7 V and 5.5 V. The device generates regulated current sinks with high absolute and channel-to-channel accuracy to drive up to 2 LEDs. It can support LEDs with forward voltage as high as 3.8 V. The current sink for each channel can be set with 2 individual external resistors. Each channel is controlled independently. The PWM control can be applied directly to the 2 EN (enable) pins to provide brightness control. When enabled, the charge pump, which uses a small ceramic bucket capacitor between C_{1P} and C_{1N}, operates to regulate the V_{OUT} with a clamping voltage at typ. 5 V. The tiny QFN20 (1.8x3.2 mm) package allows the device to be also used for applications with space limitations.

Table 1: Device summary

Oder code	Package	Packing
STP2CMPQTR	QFN20 (1.8x3.2 mm)	Tape and reel

This is information on a product in full production. www.st.com

Contents

1 Application schematic 5

2 Pin configuration 7

3 Maximum ratings 8

4 Electrical characteristics 9

5 Detailed description 10

5.1 Enable pin (EN) 10

5.2 LED turn-on pin (ONx) 10

5.3 Programmable output current 10

5.4 Charge pump 10

5.5 Thermal protection 10

6 Typical performance characteristics 11

7 PCB layout 14

7.1 Recommended 14

7.2 Evaluation board 16

8 Package information 17

8.1 QFN20 (1.8x3.2 mm) package information 18

8.2 Packing information 20

9 Revision history 22

List of tables

Table 1: Device summary 1
Table 2: Typical external components 5
Table 3: Pin description 7
Table 4: Absolute maximum ratings 8
Table 5: Recommended operating conditions 8
Table 6: Thermal data 8
Table 7: Electrical characteristics 9
Table 8: QFN20 (1.8x3.2 mm) package mechanical data 19
Table 9: Document revision history 22

List of figures

Figure 1: Application schematic 5
Figure 2: Block schematic 6
Figure 3: Pin connections (top view) 7
Figure 4: Efficiency vs. V_{IN}, I_{OUT} = 10 mA 11
Figure 5: Efficiency vs. V_{IN}, I_{OUT} = 60 mA 11
Figure 6: V_{OUT} vs. V_{IN} 12
Figure 7: PWM modulation CH1-2 12
Figure 8: Output ripple 13
Figure 9: Top layer 14
Figure 10: Bottom layer 15
Figure 11: Top overlay 15
Figure 12: Evaluation board 16
Figure 13: QFN20 (1.8x3.2 mm) package outline 18
Figure 14: QFN20 (1.8x3.2 mm) recommended footprint 19
Figure 15: QFN20 (1.8x3.2 mm) carrier tape outline 20
Figure 16: QFN20 (1.8x3.2 mm) reel outline 21

1 Application schematic

Figure 1: Application schematic

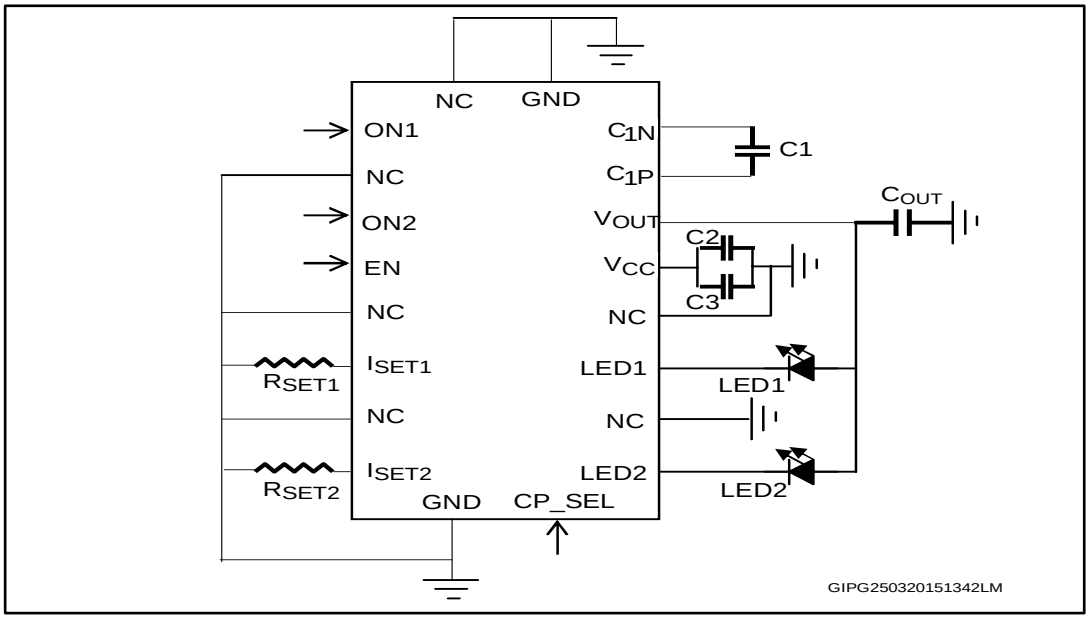

Figure 1: "Application schematic" shows the typical application diagram with the external components. To ensure an optimal charge pump performance, it is highly recommended that the bucket capacitor, C1, and the output capacitor, C_{OUT}, be placed as close as possible to the pins.

Table 2: Typical external components

Component	Manufacturer	Part number	Value	Size
C_{IN},C_{OUT}	Murata	GRM155R61A105KE15D	1 µF/10 V	0402
	TDK	C1005X5R1A105MT		
C2	Murata	GRM188R60J106ME84	10 µF/6.3 V	0603
	TDK	C1608X5R0J106MT		
C3	Murata	GRM155R60J104KA01D	100 nF	0402
	TDK	C1005X5R1C104KT		
R_{SET1-2} (1)	Tyco	CPF0402B976RE1	976 Ω	0402
LED1-2 (2)				

Notes:

(1) 649 Ω to 7.87 kΩ according to the desired output current from each channel.

(2) Forward voltage typ. 3.8 V.

All the above components refer to a typical application. Operation of the device is not limited to the choice of these external components.

Figure 2: Block schematic

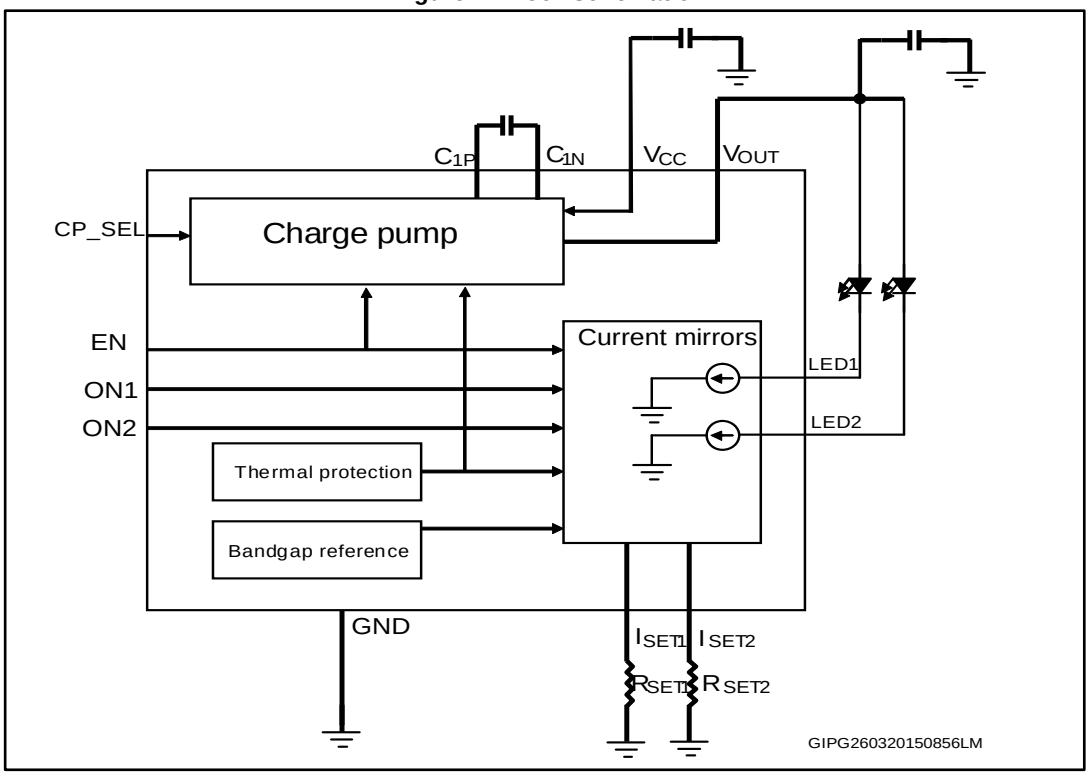

2 Pin configuration

Figure 3: Pin connections (top view)

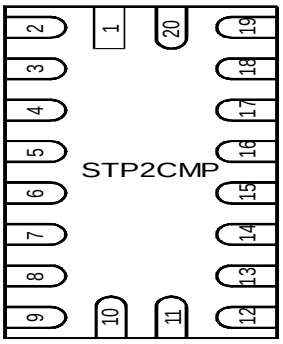

Table 3: Pin description

Pin	Symbol	Description
1	NC	Not connected
2	ON1	LED1 enable
3	NC	Not connected
4	ON2	LED2 enable
5	EN	Chip enable
6	NC	Not connected
7	I_{SET1}	LED1 max. current setting resistor
8	NC	Not connected
9	I_{SET2}	LED2 max. current setting resistor
10	GND	Ground
11	CP_SEL	Charge pump mode selection, 1 = enable 0 = disable
12	LED2	2nd LED current sink
13	NC	Not connected
14	LED1	1st LED current sink
15	NC	Not connected
16	V_{CC}	Supply voltage
17	V_{OUT}	Charge pump output
18	C_{1P}	Positive terminal of charge pump bucket capacitor
19	C_{1N}	Negative terminal of charge pump bucket capacitor
20	GND	Ground

3 Maximum ratings

Table 4: Absolute maximum ratings

Symbol	Parameter	Value	Unit
ON_{1-2}, V_{CC}, EN, CP_SEL, C_{1P}, C_{1N}	Supply voltage	- 0.3 to + 6.0	V
V_{OUT}	Output voltage	- 0.3 to + 6.0	V
LED1-2, $ISET_{1-2}$	Current setting	-0.3 to 2	V
ESD	Human body model	±1500	V
	Charged device model	±500	
	Machine model	±200	
T_{AMB}	Operating ambient temperature	- 30 to 85	°C
T_J	Maximum operating junction temperature	+150	°C
T_{STG}	Storage temperature	-65 to 150	°C

Table 5: Recommended operating conditions

Symbol	Parameter	Min.	Typ.	Max.	Unit
V_{CC}	Supply voltage	2.7		5.5	V
T_{op}	Operating temperature	-30		85	°C
I_{LED}	Current through each LED	2.5		30	mA
$T_{pwm_}ON$	ON time of PWM signal at each ON pin	33			µs
$T_{pwm_}OFF$	OFF time of PWM signal at each OFF pin				
V_{fw}	LED forward voltage			3.8	V

Table 6: Thermal data

Symbol	Parameter	Value	Unit
R_{thJA} (1)	Thermal resistance junction-ambient	70	°C/W

Notes:

(1)This parameter corresponds to the PCB board, 4-layer with $inch^2$ of cooling area.

4 Electrical characteristics

V_{CC} = 3.3 V, V_{EN} = V_{ON1} = V_{ON2} = V_{CC}, $V_{CP\text{-}SEL}$ = V_{CC}, R_{SET1} = R_{SET2} = 649 Ω, C_1 = 1 µF, typical values are at T_A = 25 °C unless otherwise specified.

Table 7: Electrical characteristics

Symbol	Parameter	Test conditions	Min.	Typ.	Max.	Unit
V_{CC}	Supply voltage		2.7		5.5	V
V_{cp_clamp}	Charge pump clamp voltage	2.7 V = < V_{CC} < 3.1 V; V_{CP_SEL} = V_{CC}; I_{OUT} ≤ 40 mA		5		V
		V_{CC} > 3.1 V; V_{CP_SEL} = V_{CC}; I_{OUT} ≤ 120 mA		5		
T_{cp_start}	Charge pump start-up time	From CP_SEL low to high transition to CP reaches steady-state 5 V			10	ms
$I_{LED1,2}$	LED sink current for each channel	R_{setx} = 649 Ω at V_{LEDx}= 0.9 V; V_{CC} ≥ 3.1 V	27.9	30	32.1	mA
		R_{setx} = 7.87 kΩ at V_{LEDx}= 0.9 V; V_{CC} ≥ 3.1 V	2.33	2.5	2.68	mA
ΔI_{LED}	Output current error between each channel	R_{SET1} = R_{SET2},T_A = 25 °C		±1	±4	%
V_{IH}	High level input voltage		2.0			V
V_{IL}	Low level input voltage				0.8	
I_{CC}	Supply operating current	V_{ON1} = V_{ON2} = GND; no-load; V_{CC} = 5.5 V (charge pump disabled); V_{CP_SEL} = GND, R_{SET1} = R_{SET2} = 7.87 kΩ		3.6		mA
		V_{ON1} = V_{ON2} = GND; no-load; V_{CC} = 5.5 V (charge pump disabled); V_{CP_SEL} = GND, R_{SET1} = R_{SET2} = 649 Ω		17		
		V_{ON1} = V_{ON2} = GND; no-load; V_{CC} = 3.3 V (charge pump enabled); V_{CP_SEL} = V_{CC}, R_{SET1} = R_{SET2} = 7.87 kΩ		4.0		
		V_{ON1} = V_{ON2} = GND; no-load; V_{CC} = 3.3 V (charge pump enabled); V_{CP_SEL} = V_{CC}, R_{set1} = R_{SET2} = 649 Ω		17.2		
$I_{SHUTDOWN}$	Supply current during power-down	V_{EN} = V_{ON1} = V_{ON2} = V_{CP_SEL} = 0 V		1	5	µA
T_{SD}	Thermal shutdown			150		°C
T_{HS}	Thermal shutdown hysteresis			15		°C

5 Detailed description

The STP2CMP is a charge-pump-based 2-channel LED driver designed for mobile phone display backlighting, using constant current topology. Each of the 2 channels can be controlled independently. When ONx is pulled high, a constant current is sunk into the LEDx pin when one LED is connected. This constant current is defined or programmed by the value of the resistor on the I_{SETX} pin.

5.1 Enable pin (EN)

The active high enable input pin is used to shut down the whole device. When this pin is pulled low, the device enters into shutdown mode with only 5 µA max. current consumption. An internal pull-down of 300 kΩ is present on this pin.

5.2 LED turn-on pin (ONx)

When the EN pin is pulled high, the STP2CMP provides the flexibility to control the turning on/off on the 2 channels independently through the 2 active high ON pins. To control the brightness of each LED channel, it is possible to drive the selected ON pin with a PWM signal with a frequency up to a minimum T_{ON}/T_{OFF} of 33 µs. An internal pull-down of 300 kΩ is present on these pins.

5.3 Programmable output current

The LED currents at the 2 channels are programmed individually through a resistor connected from I_{SET1}, I_{SET2} to ground. The relationship between the resistor (R_{SET}) and the LED current (I_{LED}) is governed by the below equation:

$R_{SET} = 16 \times (1.22/I_{LED})$

5.4 Charge pump

The STP2CMP charge pump can be disabled or enabled according to the CP_SEL pin. When enabled (CP_SEL is high), the charge pump provides a clamping voltage of typ. 5.0 V to ensure enough headroom to drive the LEDs. An internal pull-down of 300 kΩ is present on this pin. The charge pump can be disabled by pulling low the CP_SEL pin, based on the V_{CC} and forward voltage of the LEDs used. This allows the connection of V_{CC} directly to V_{OUT} to drive the external LEDs. At $V_{CC} \geq 3.1$ V the charge pump maintains regulation at 5 V when the total current drawn from it (at V_{OUT} pin) is ≤ 120 mA. At $2.7 \leq V_{CC} < 3.1$ V so that the charge pump maintains the regulation at 5 V, the total current drawn from it (on V_{OUT} pin) must be lowered to ≤ 40 mA.

5.5 Thermal protection

The thermal protection circuit ensures device shutdown when it is overheated (for example, due to an output short-circuit) to typ. 150 °C.The device resumes normal operation when the temperature drops by 15 °C from the thermal shutdown threshold.

6 Typical performance characteristics

Figure 4: Efficiency vs. V_{IN}, I_{OUT} = 10 mA

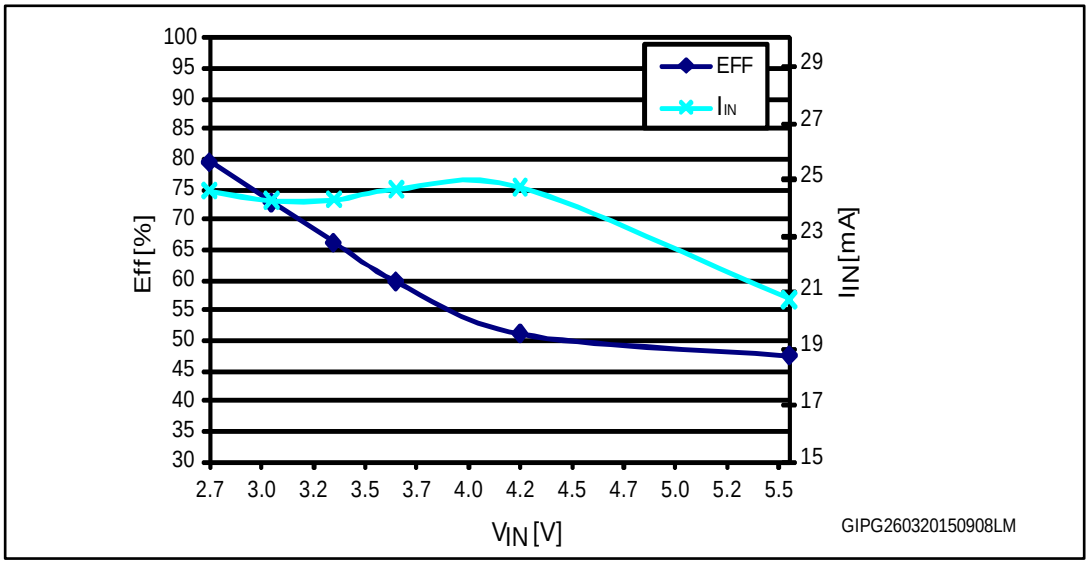

Figure 5: Efficiency vs. V_{IN}, I_{OUT} = 60 mA

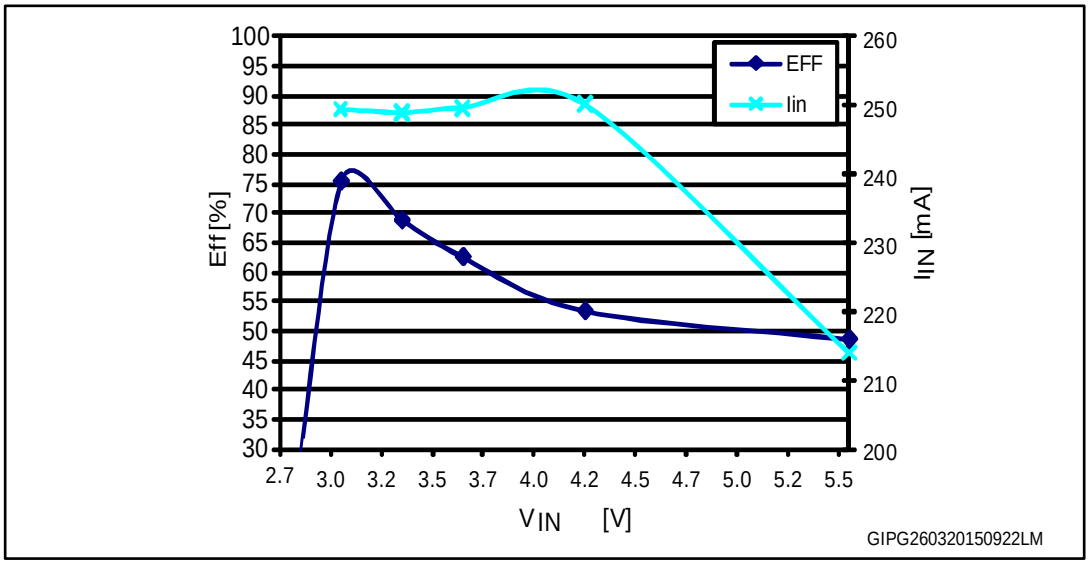

Figure 6: V_{OUT} vs. V_{IN}

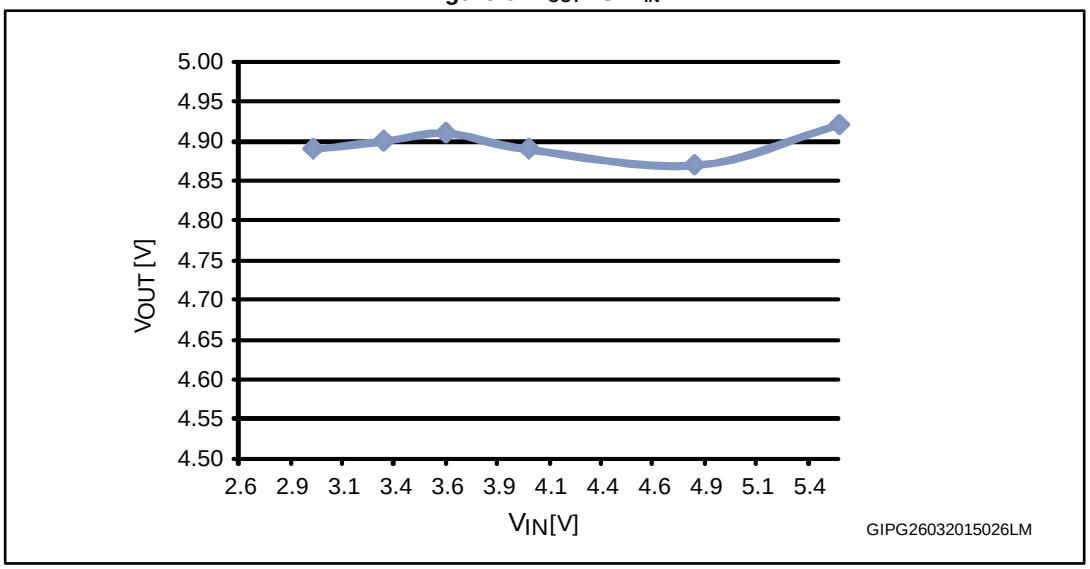

Figure 7: PWM modulation CH1-2

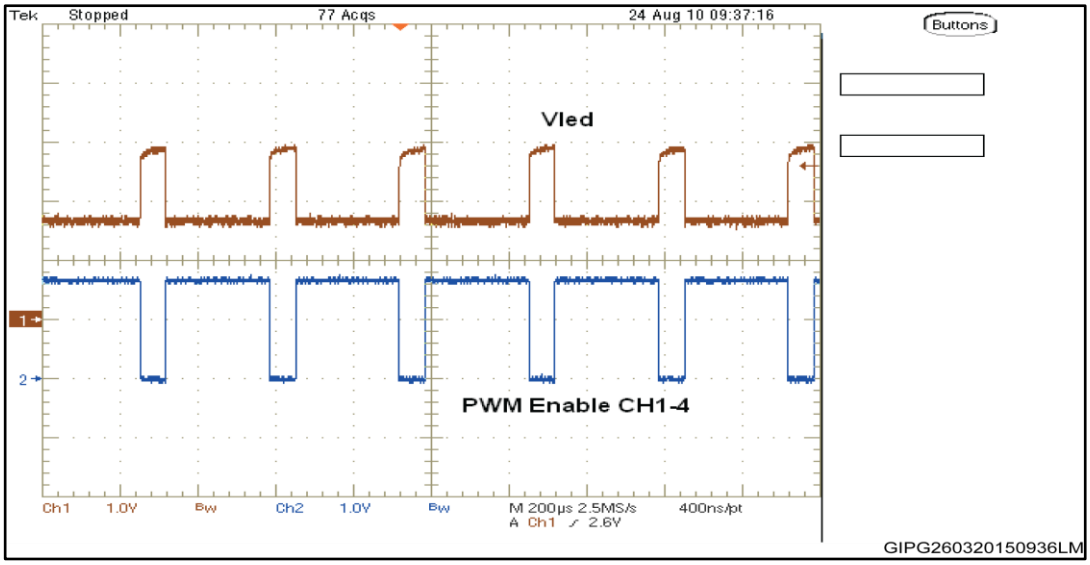

Figure 8: Output ripple

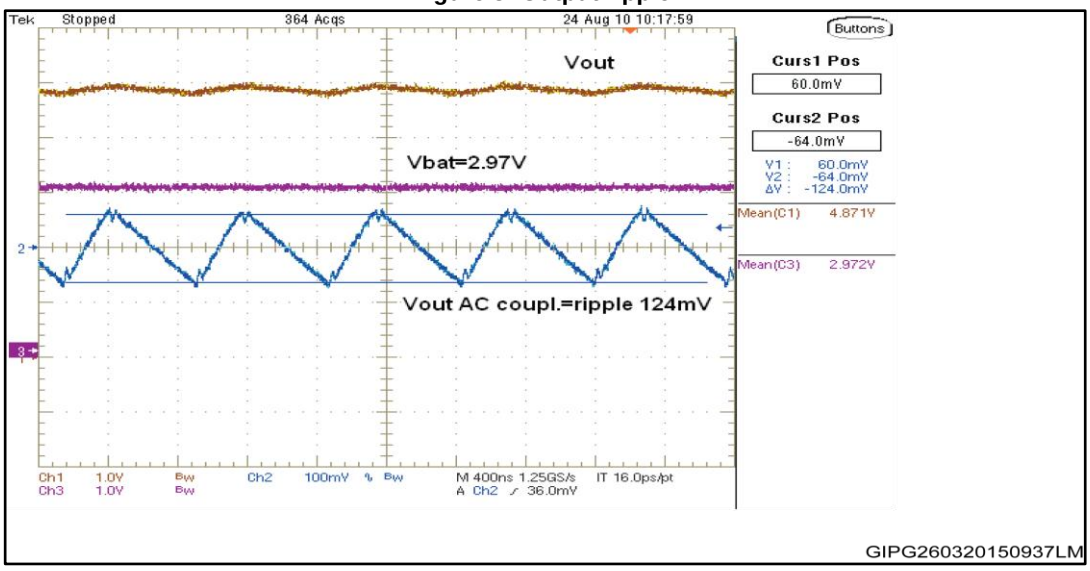

7 PCB layout

7.1 Recommended

The STP2CMP is a charge pump power device so it requires a proper PCB layout in order to obtain the necessary stability and optimize line/load regulation and output voltage ripple. Input, output, and boost capacitors must be as close as possible to their relative pins.The example of the evaluation board below is shared with the STP4CMP device which is a pin compatible device with 4 current sources and the same architecture.

Figure 9: Top layer

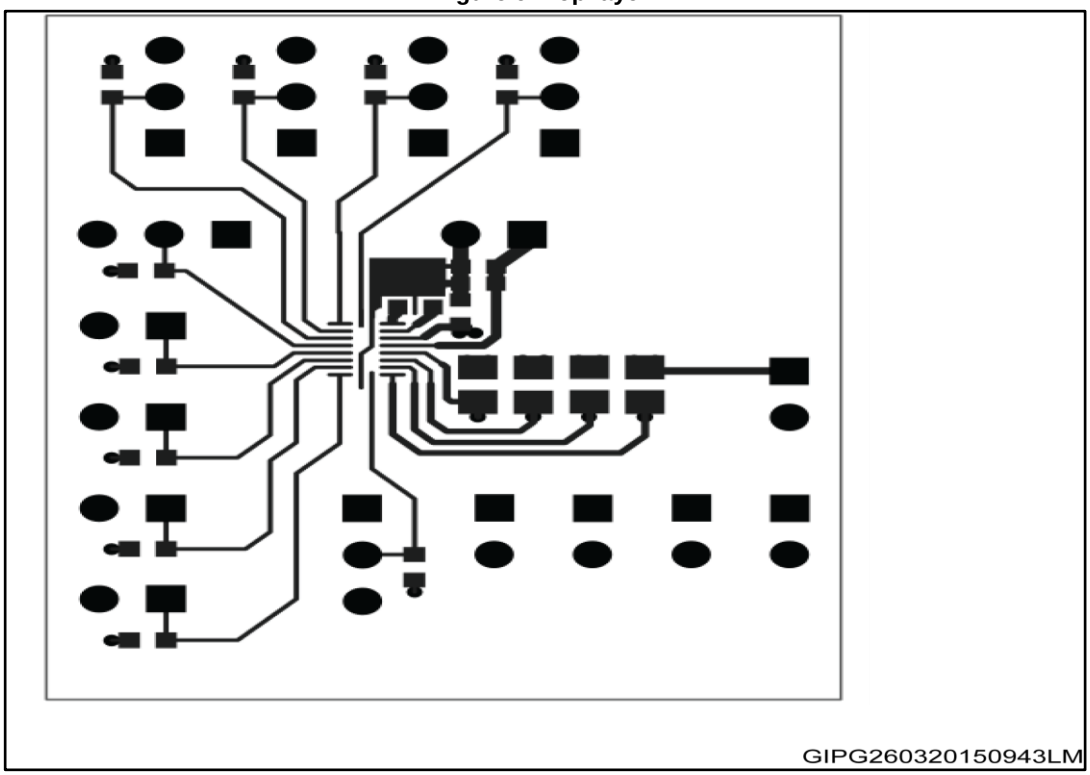

Figure 10: Bottom layer

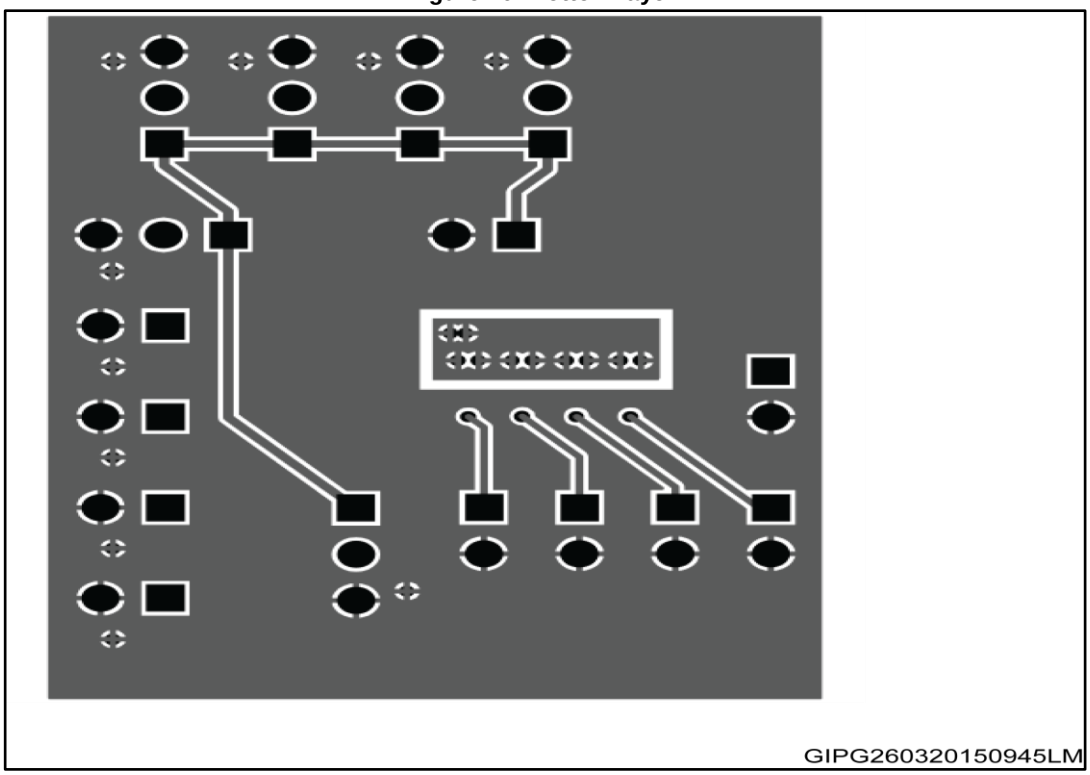

Figure 11: Top overlay

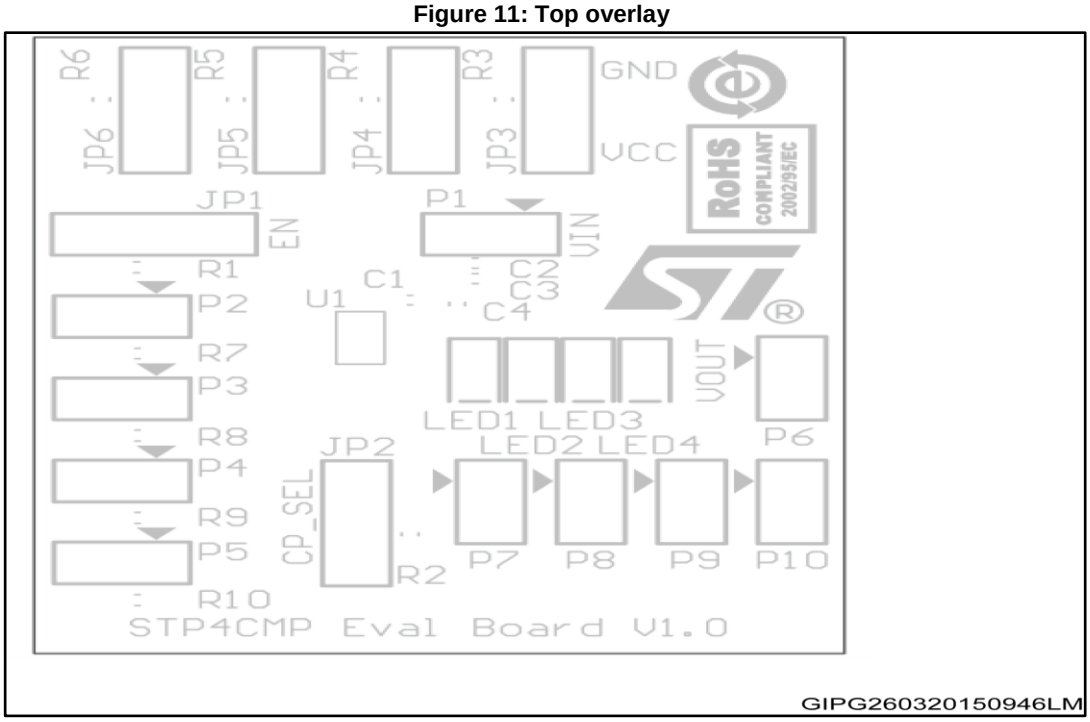

7.2 Evaluation board

Figure 12: Evaluation board

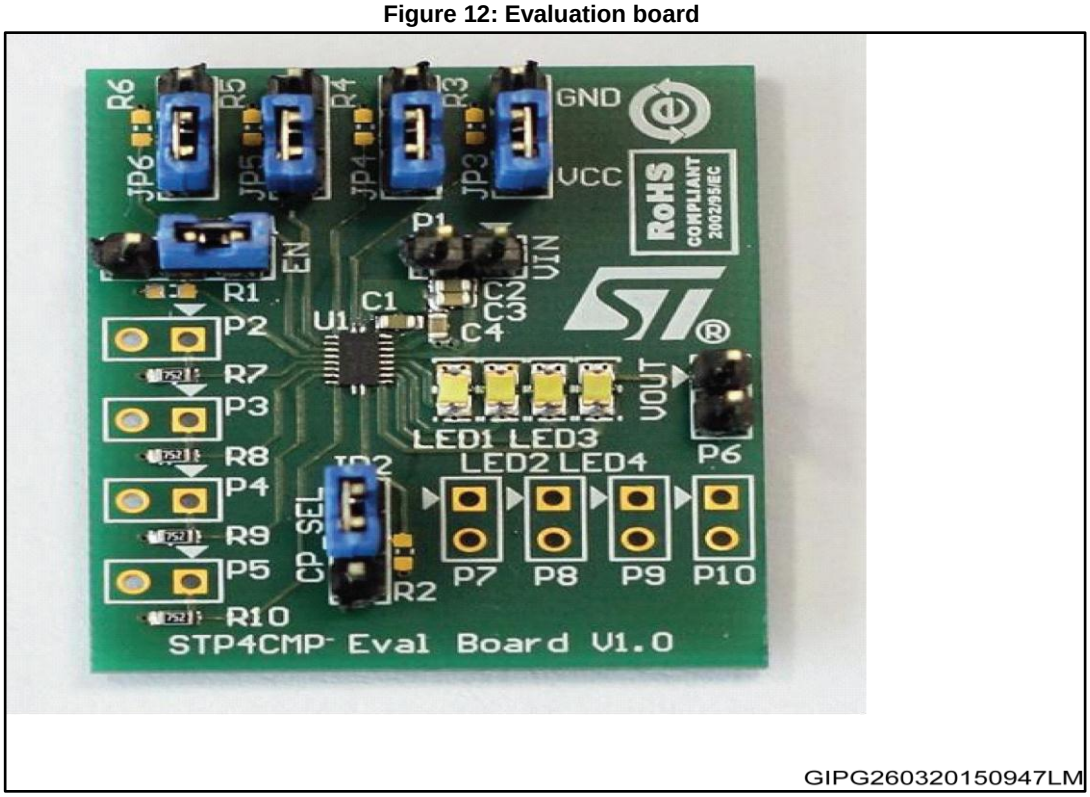

Please, note that the above evaluation board is valid both for the STP2CMP and for the STP4CMP.

8 Package information

In order to meet environmental requirements, ST offers these devices in different grades of ECOPACK® packages, depending on their level of environmental compliance. ECOPACK specifications, grade definitions and product status are available at: www.st.com. ECOPACK is an ST trademark.

8.1 QFN20 (1.8x3.2 mm) package information

Figure 13: QFN20 (1.8x3.2 mm) package outline

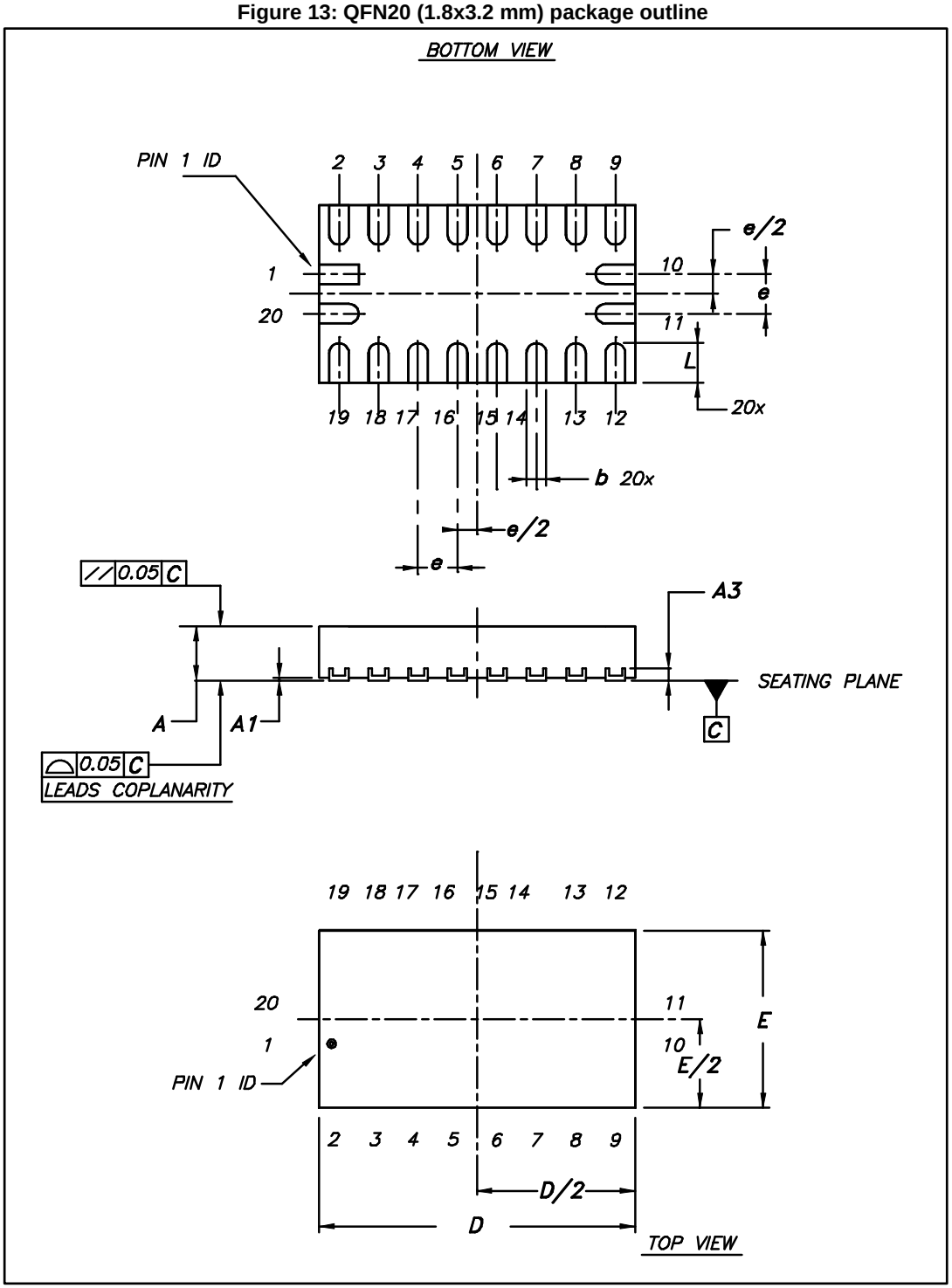

Table 8: QFN20 (1.8x3.2 mm) package mechanical data

Dim.	mm		
	Min.	Typ.	Max.
A	0.45	0.50	0.55
A1	0	0.02	0.05
A3		0.127	
b	0.15	0.20	0.25
D	3.15	3.20	3.25
E	1.75	1.80	1.85
e		0.40	
L	0.35	0.40	0.45

Figure 14: QFN20 (1.8x3.2 mm) recommended footprint

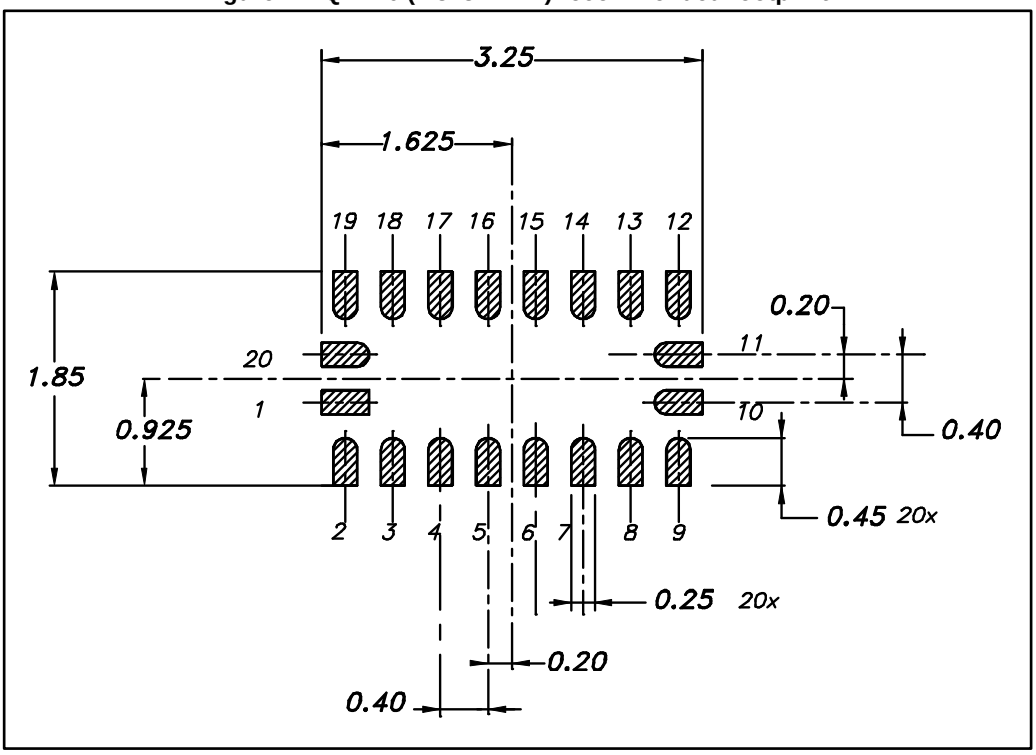

8.2 Packing information

Figure 15: QFN20 (1.8x3.2 mm) carrier tape outline

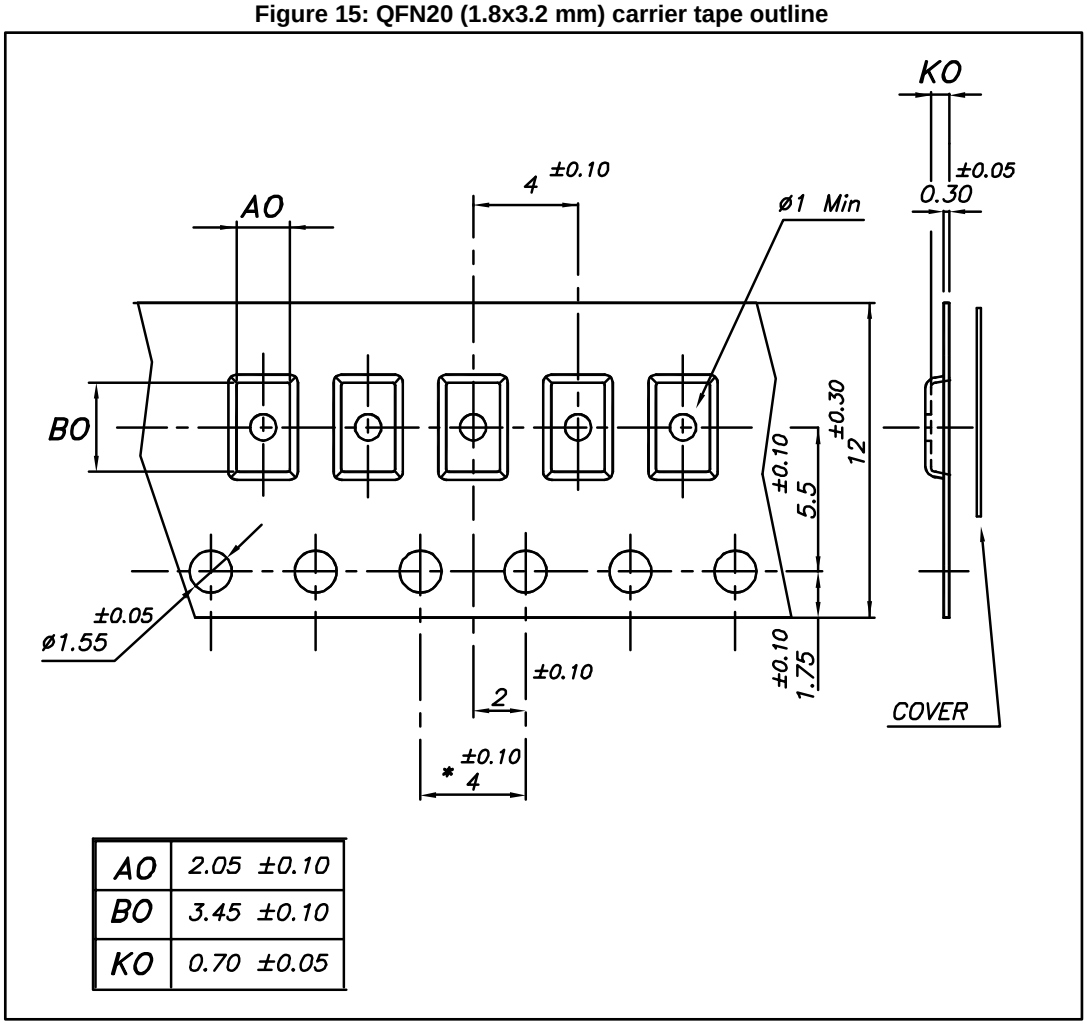

Figure 16: QFN20 (1.8x3.2 mm) reel outline

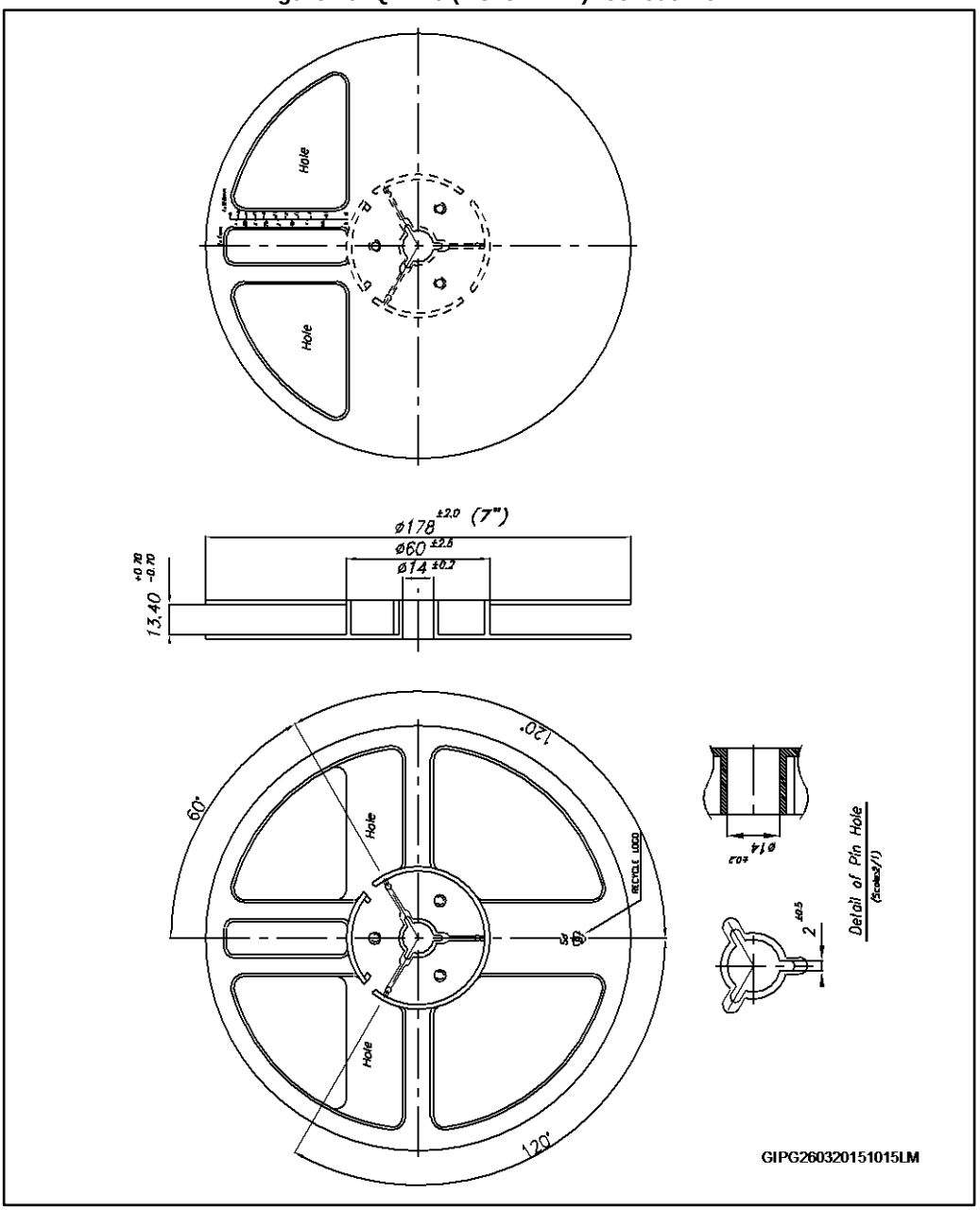

Drawing is not in scale and dimensions are in mm

9 Revision history

Table 9: Document revision history

Date	Revision	Changes
25-Jan-2012	1	Initial release.
09-Apr-2015	2	Updated features.

IMPORTANT NOTICE – PLEASE READ CAREFULLY

STMicroelectronics NV and its subsidiaries ("ST") reserve the right to make changes, corrections, enhancements, modifications, and improvements to ST products and/or to this document at any time without notice. Purchasers should obtain the latest relevant information on ST products before placing orders. ST products are sold pursuant to ST's terms and conditions of sale in place at the time of order acknowledgement.

Purchasers are solely responsible for the choice, selection, and use of ST products and ST assumes no liability for application assistance or the design of Purchasers' products.

No license, express or implied, to any intellectual property right is granted by ST herein.

Resale of ST products with provisions different from the information set forth herein shall void any warranty granted by ST for such product.

ST and the ST logo are trademarks of ST. All other product or service names are the property of their respective owners.

Information in this document supersedes and replaces information previously supplied in any prior versions of this document.

© 2015 STMicroelectronics – All rights reserved